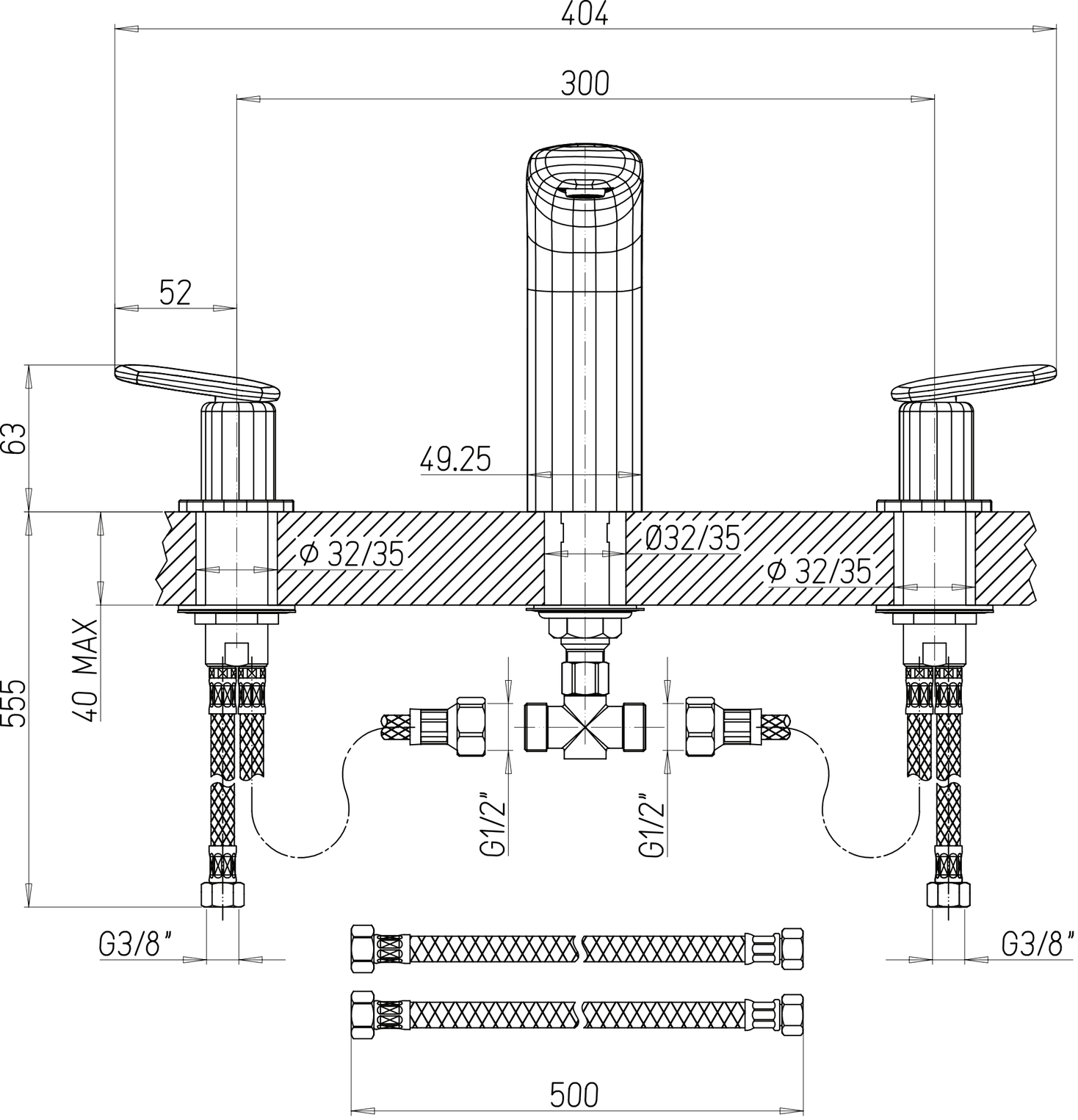
404
300
52
63
49.25
Ø 32/35
Ø32/35
Ø 32/35
40 MAX
555
G1/2"
G1/2"
G3/8"
G3/8"
500

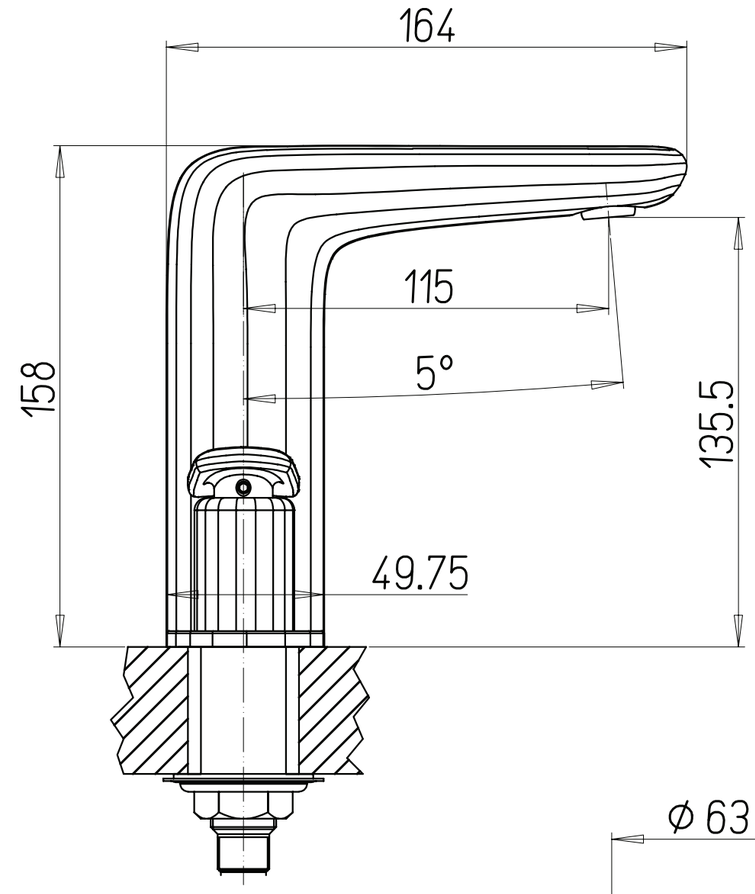
164
115
5°
158
135.5
49.75

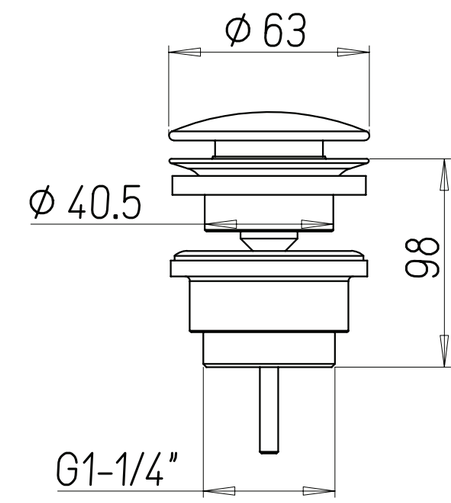
Ø 63
Ø 40.5
98
G1-1/4"

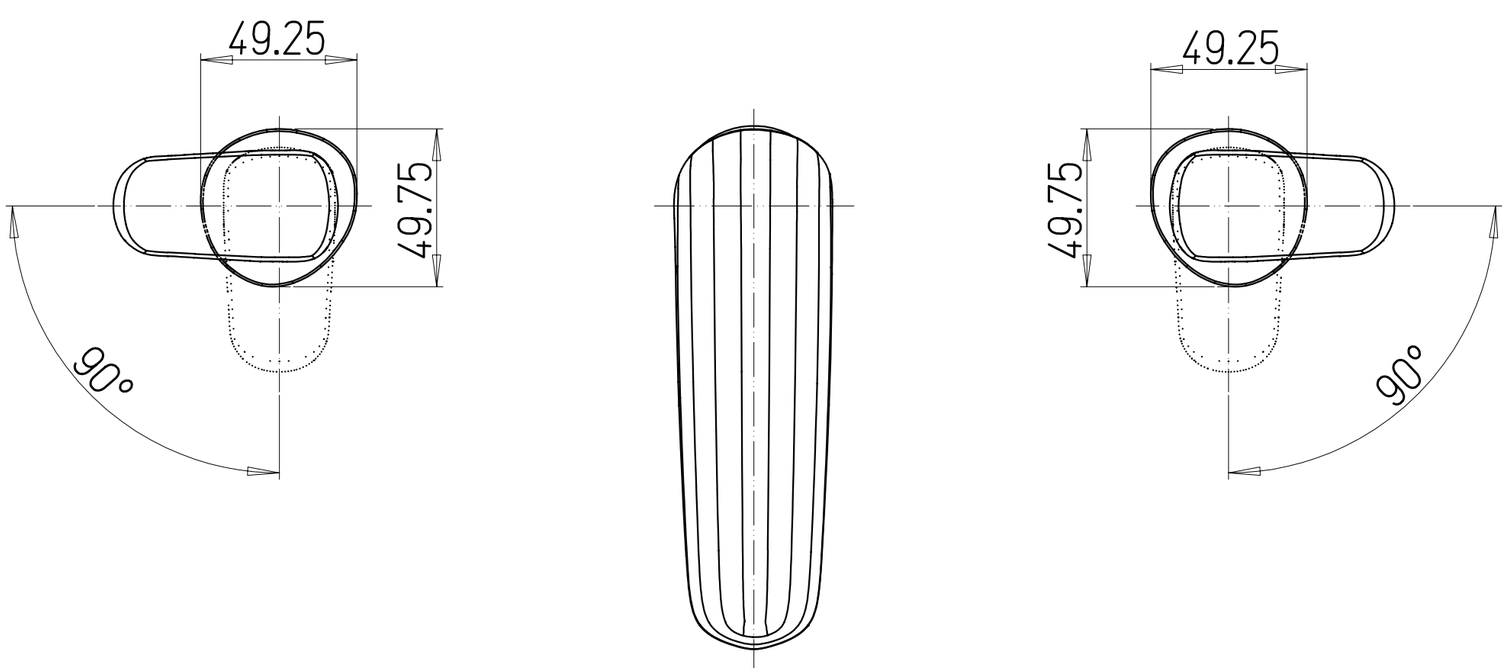
49.25
49.75
90°
49.25
49.75
90°