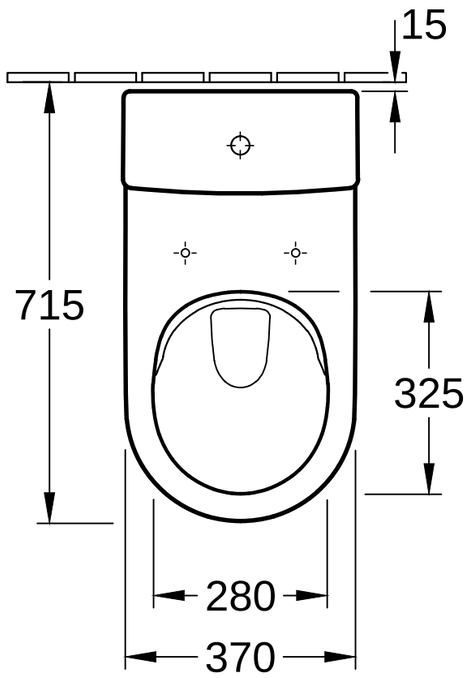

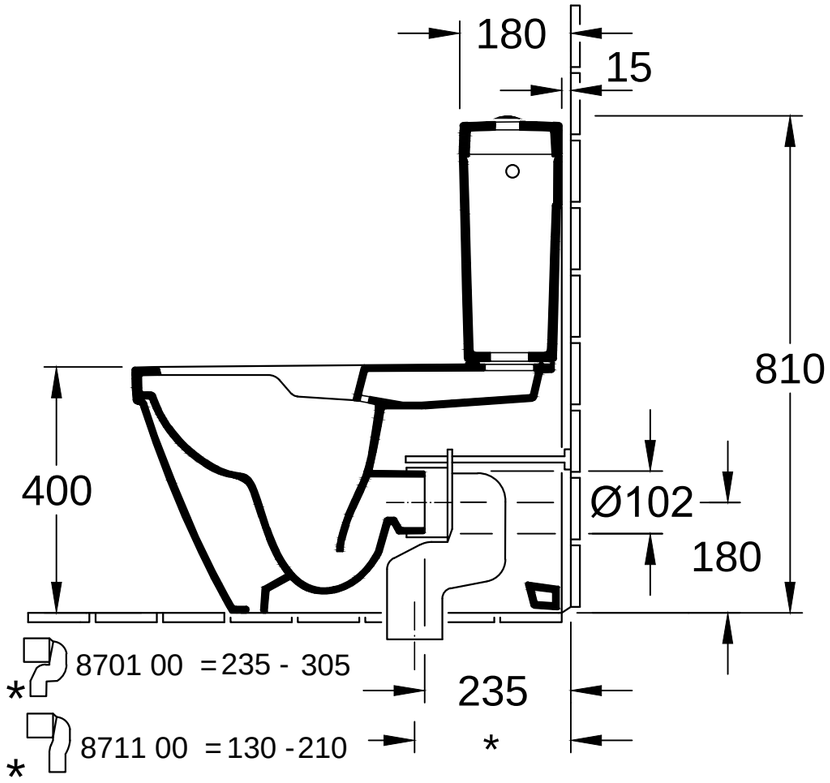

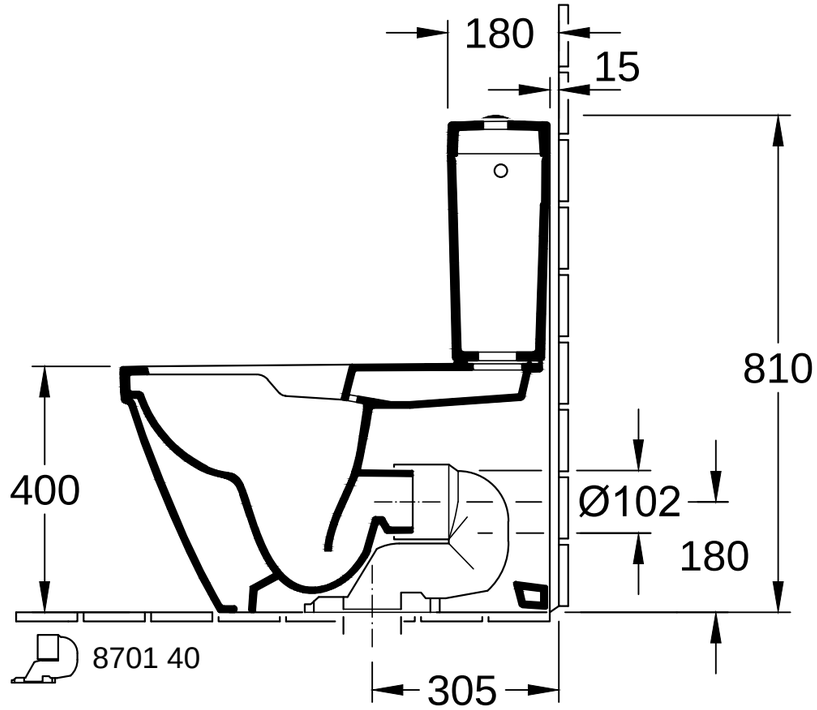

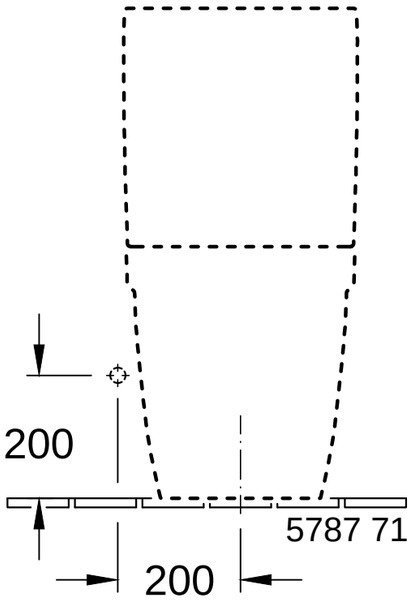

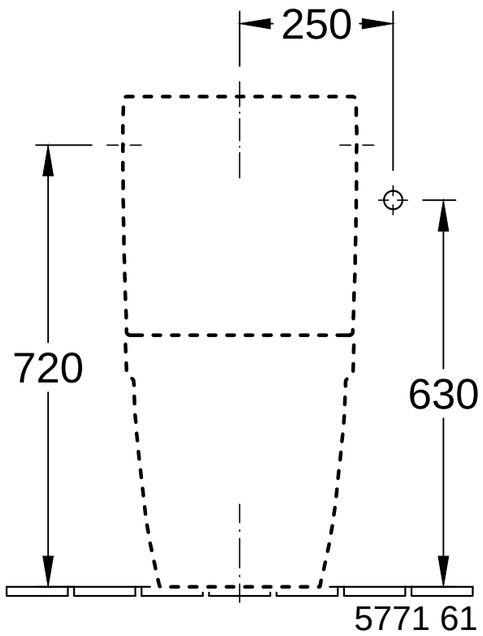

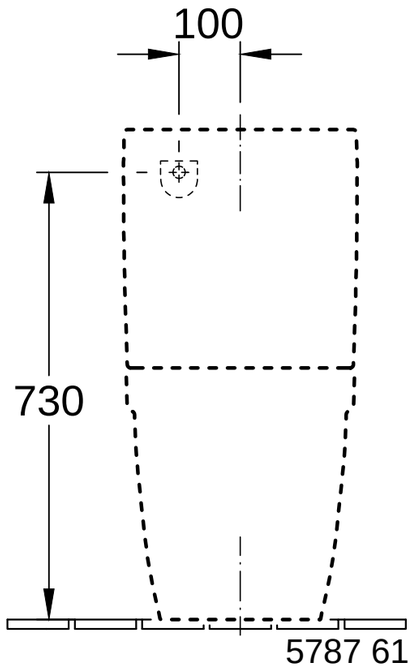

ARCHITECTURA 5691R0 578761 / 578771	Villeroy & Boch 1748
V01 / 23.07.2020	