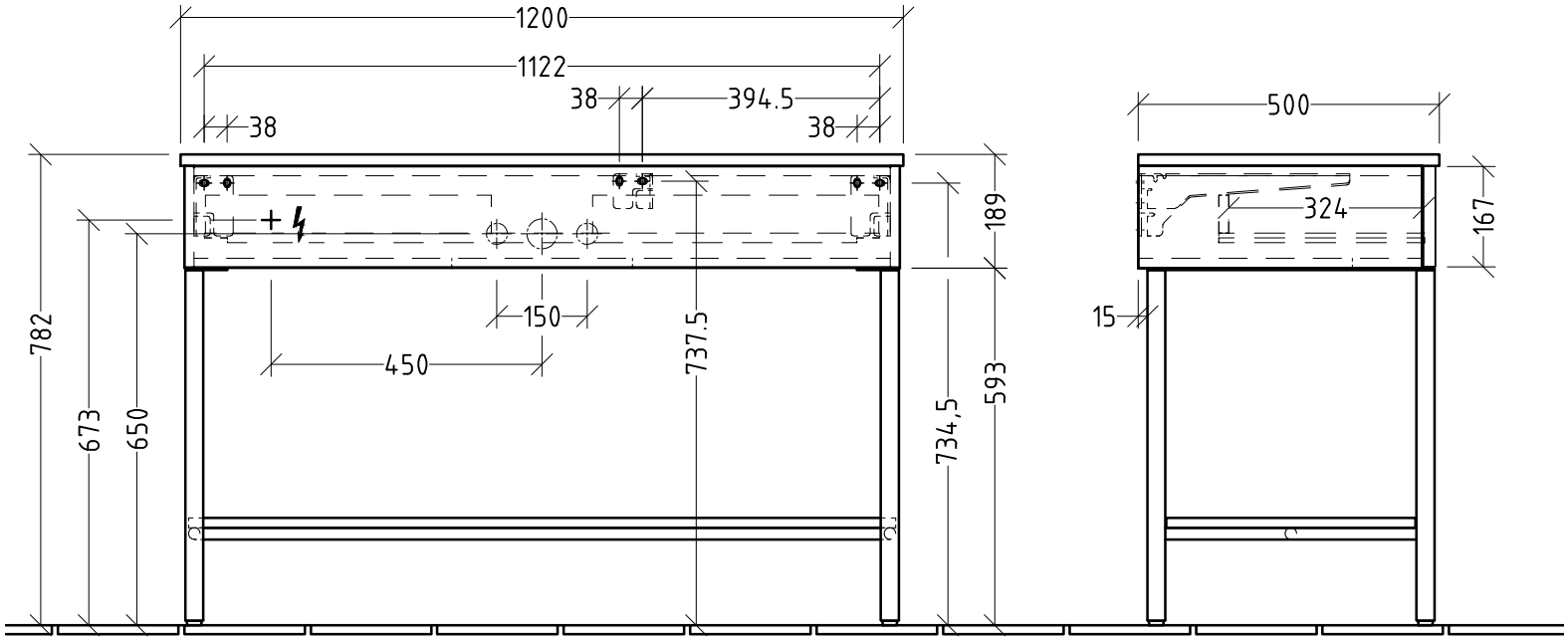

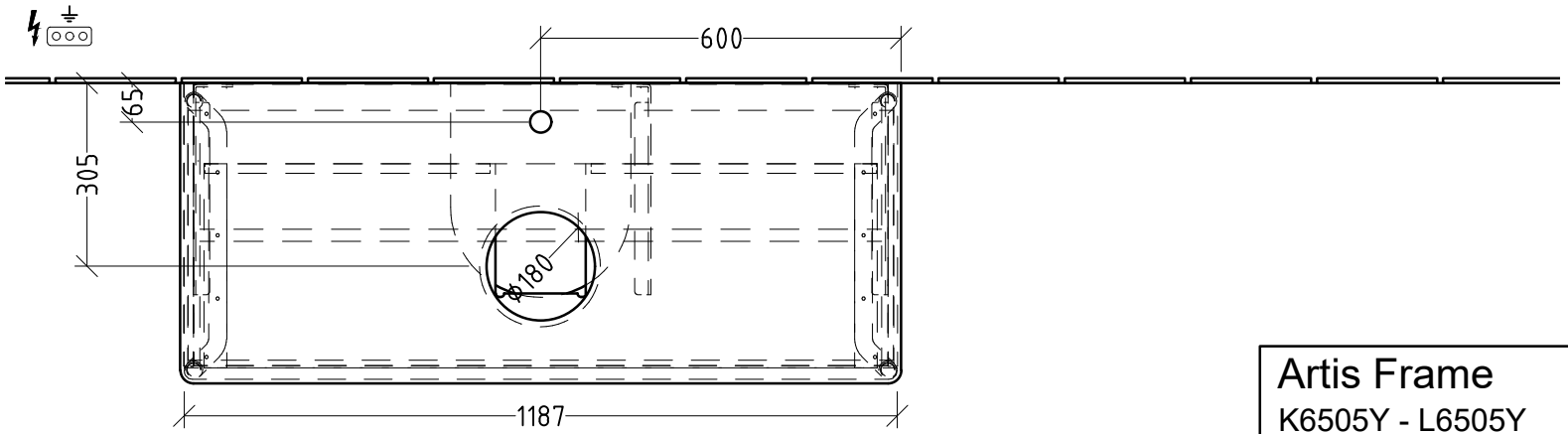

Artis Frame K6505Y - L6505Y	Villeroy & Boch 1748
V01 / 19.11.2025	