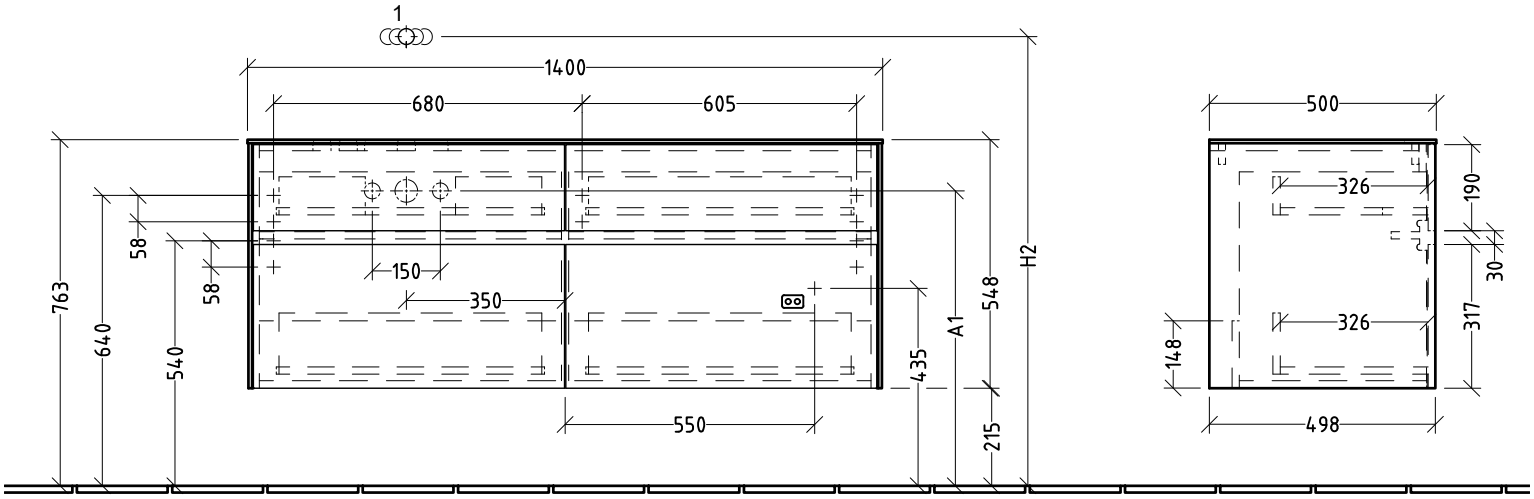

N L 220 - 240 V

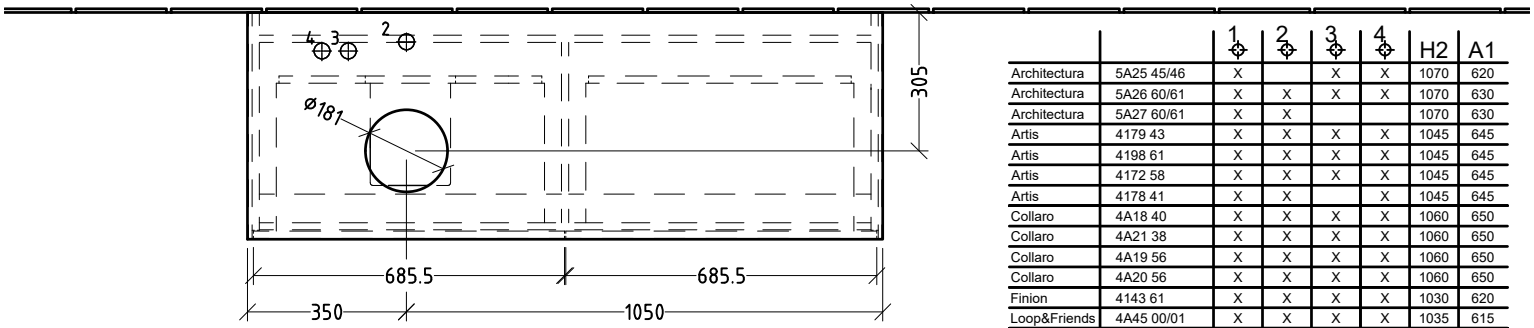

		1	2	3	4	H2	A1
Architectura	5A25 45/46	X		X	X	1070	620
Architectura	5A26 60/61	X	X	X	X	1070	630
Architectura	5A27 60/61	X	X			1070	630
Artis	4179 43	X	X	X	X	1045	645
Artis	4198 61	X	X	X	X	1045	645
Artis	4172 58	X	X	X	X	1045	645
Artis	4178 41	X	X		X	1045	645
Collaro	4A18 40	X	X	X	X	1060	650
Collaro	4A21 38	X	X	X	X	1060	650
Collaro	4A19 56	X	X	X	X	1060	650
Collaro	4A20 56	X	X	X	X	1060	650
Finion	4143 61	X	X	X	X	1030	620
Loop&Friends	4A45 00/01	X	X	X	X	1035	615
Loop&Friends	4A46 00/01	X	X	X	X	1035	615
Loop&Friends	4A47 00/01	X	X	X	X	1035	615
Loop&Friends	4A48 00/01	X	X	X	X	1035	615
Loop&Friends	4A49 00/01	X	X	X	X	1035	615
Loop&Friends	4A50 00/01	X	X			1030	610
My Nature	4110 60	X	X	X	X	1020	610
Antao	4A7240	X	X	X	X	1035	620
Antao	4A7351	X	X	X	X	1035	620
Antao	4A7465	X	X	X	X	1035	620

Collaro

C04600_C046B0

V02 / 16.02.2024

Villeroy & Boch

1748