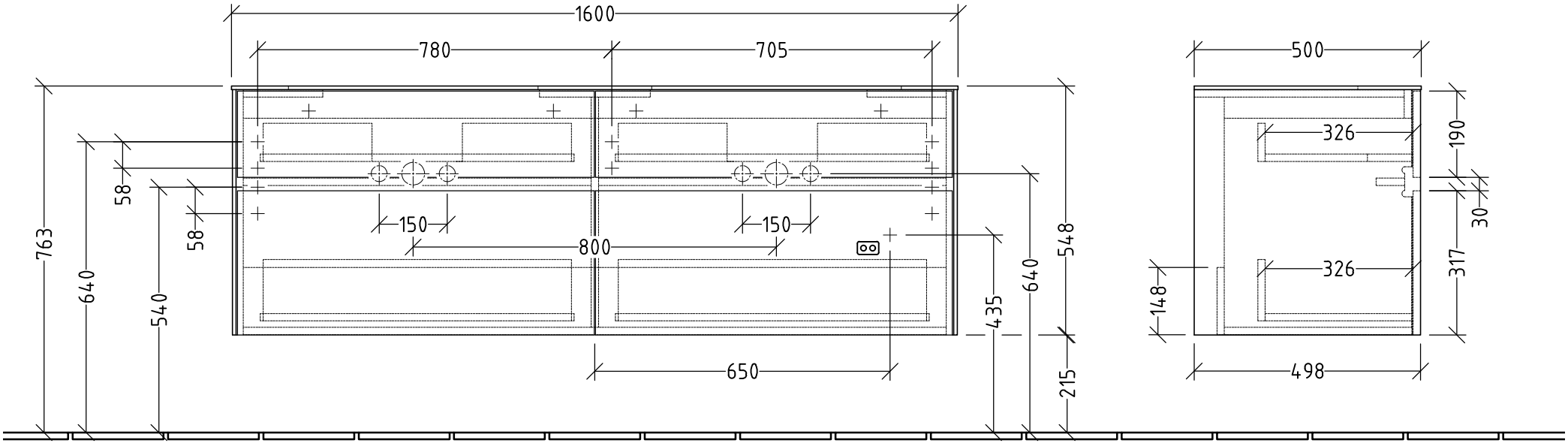

N L
220 - 240 V

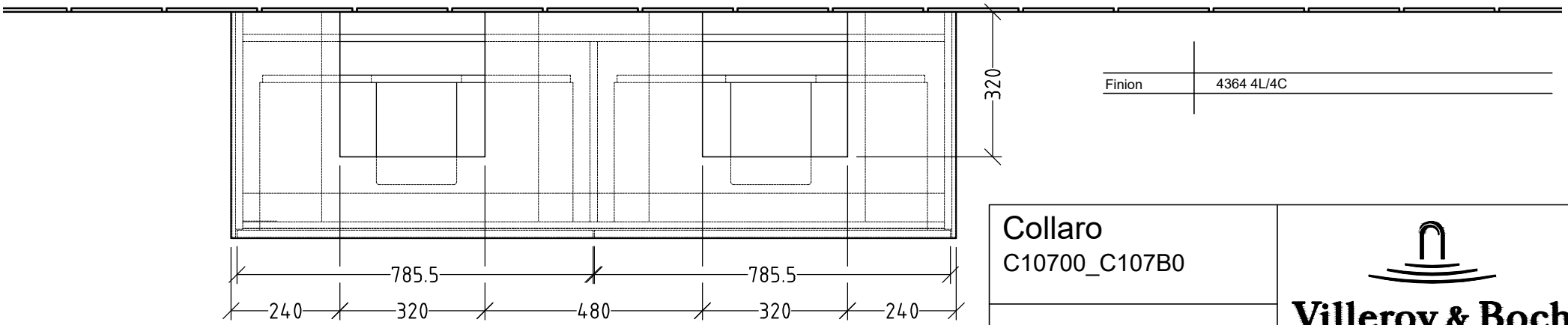

Finion	4364 4L/4C

Collaro C10700_C107B0	Villeroy & Boch 1748
V02 / 19.02.2024	