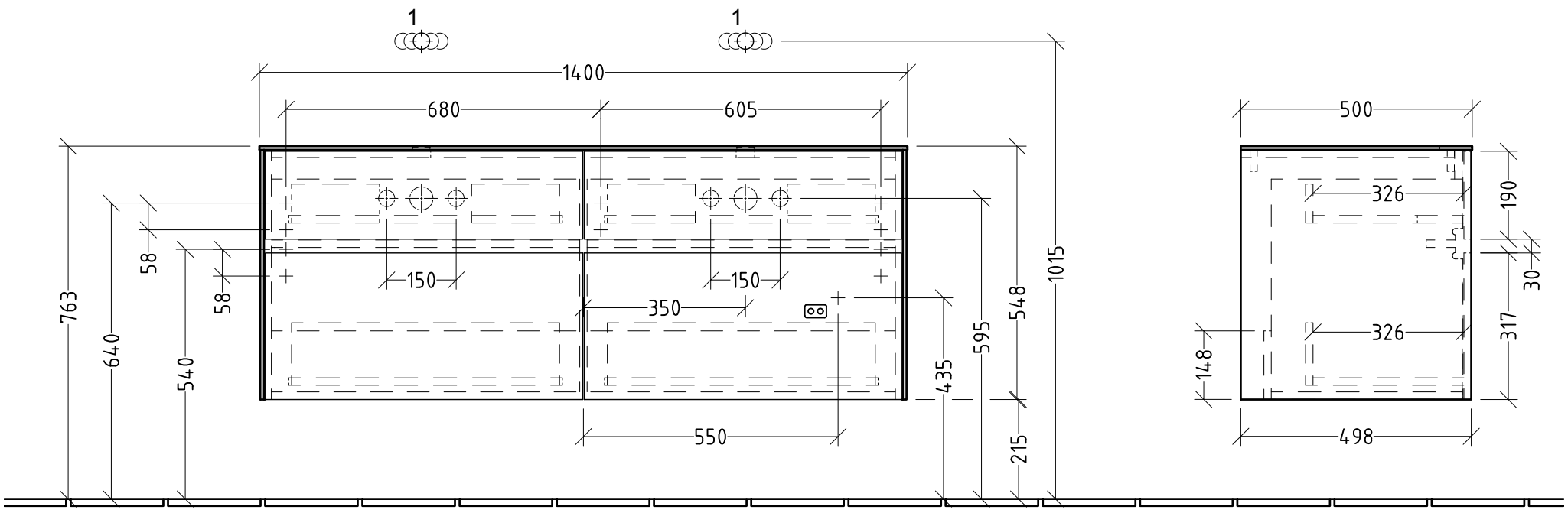

N L
220 - 240 V

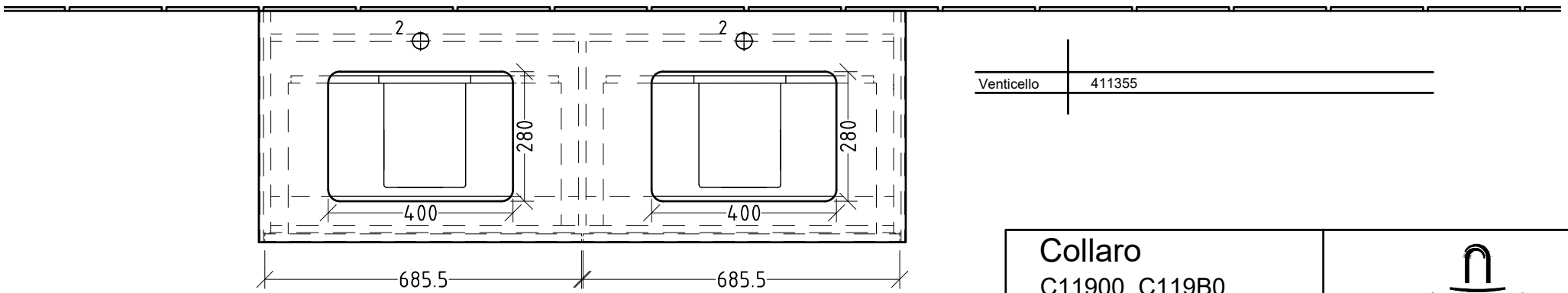

Venticello	411355

Collaro C11900_C119B0	Villeroy & Boch 1748
V02 / 19.02.2024	