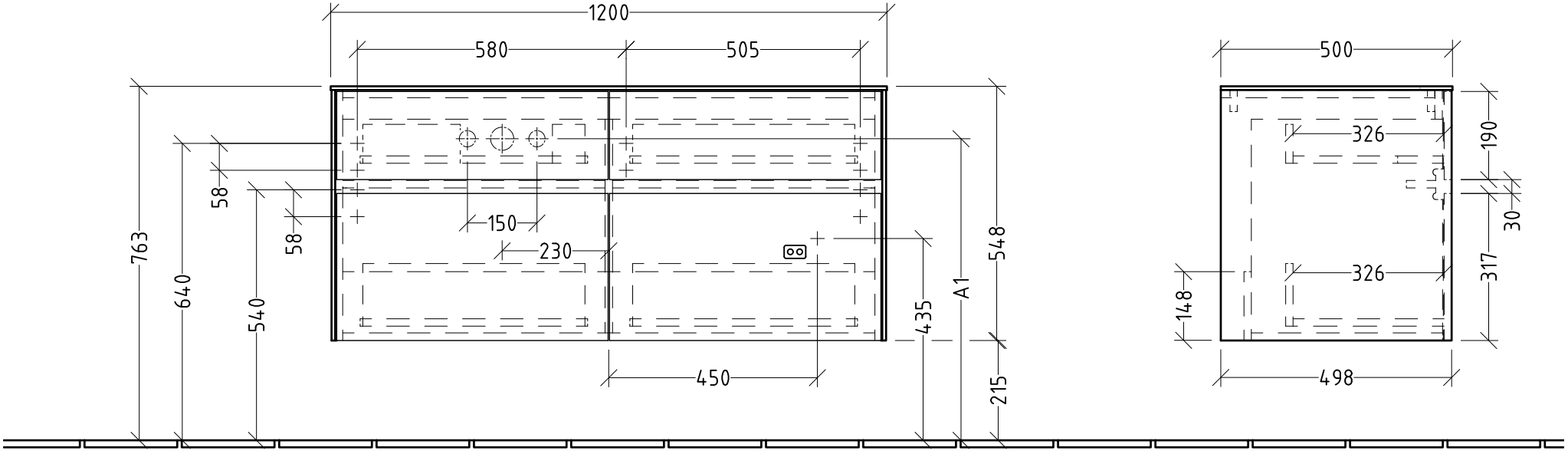

N L 220 - 240 V

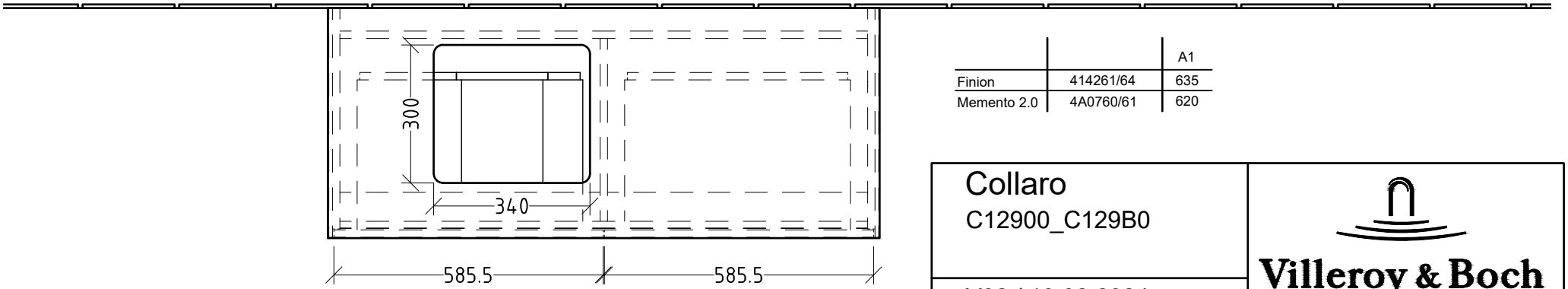

		A1
Finion	414261/64	635
Memento 2.0	4A0760/61	620

Collaro
C12900_C129B0

V02 / 19.02.2024

Villeroy & Boch
1748