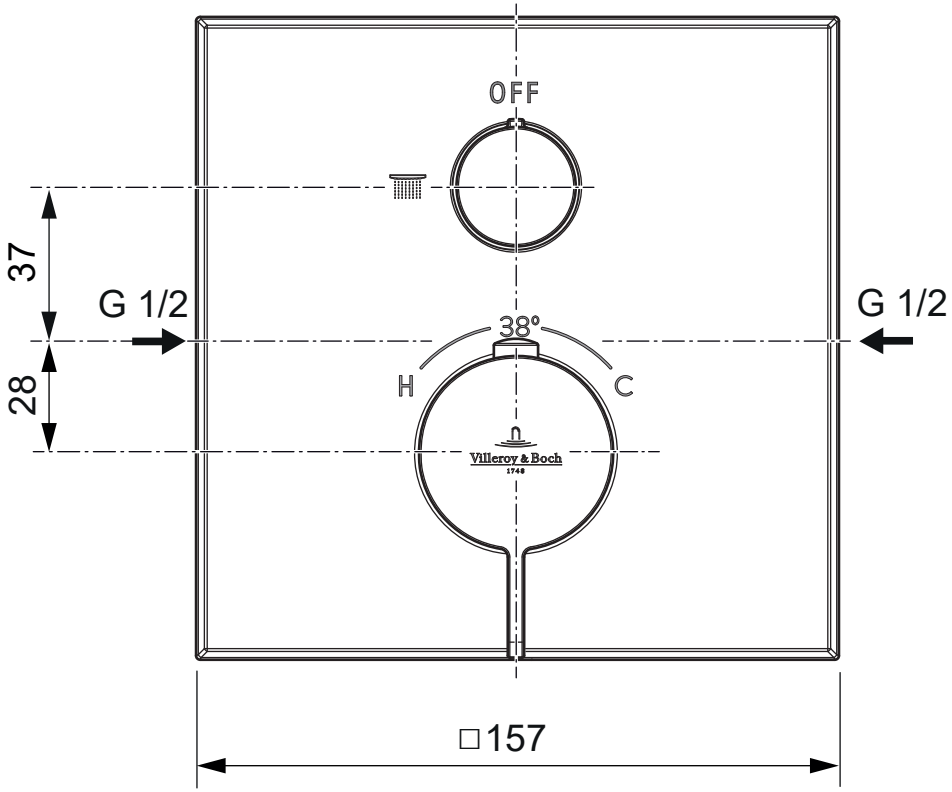

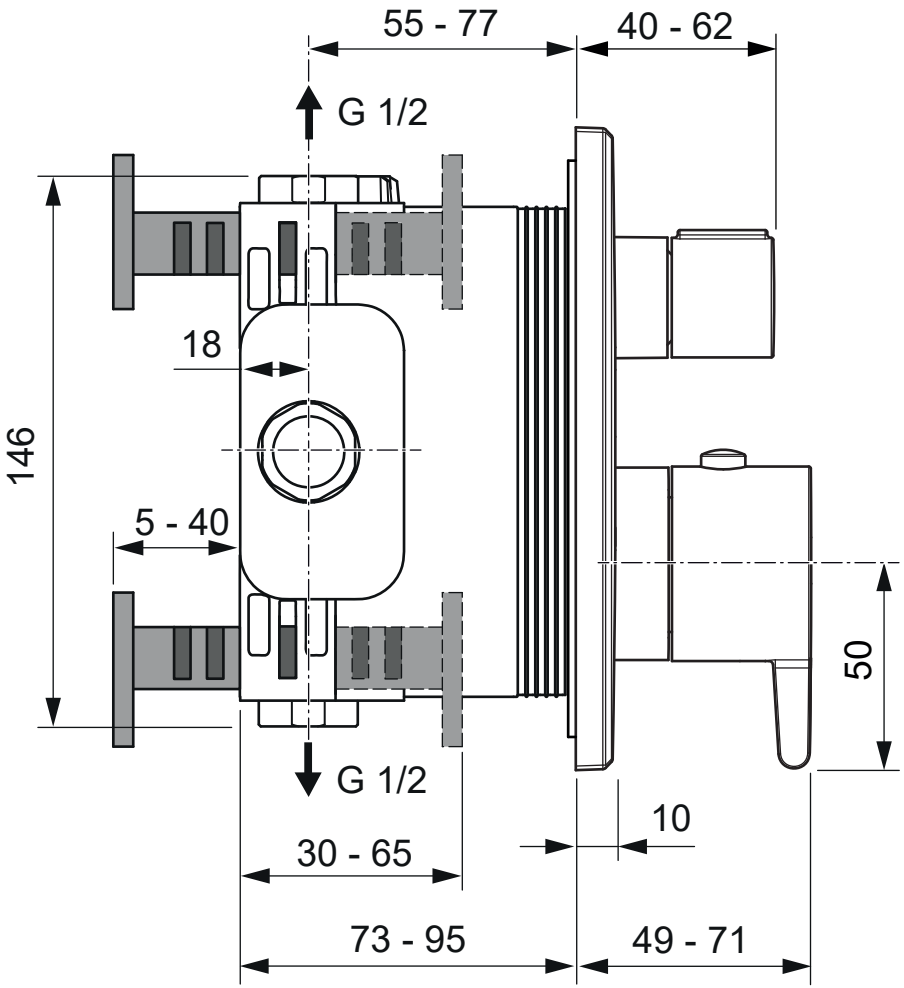

CONUM TVS127005000	Villeroy & Boch 1748
V01 / 17.11.2025	