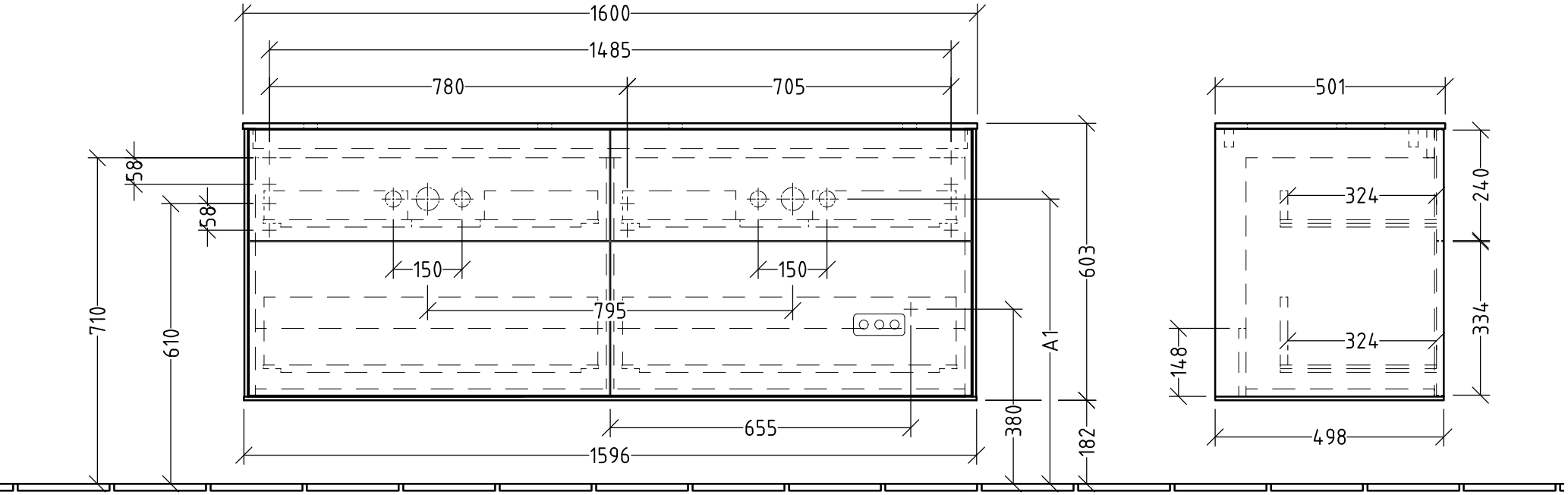

220 - 240 V

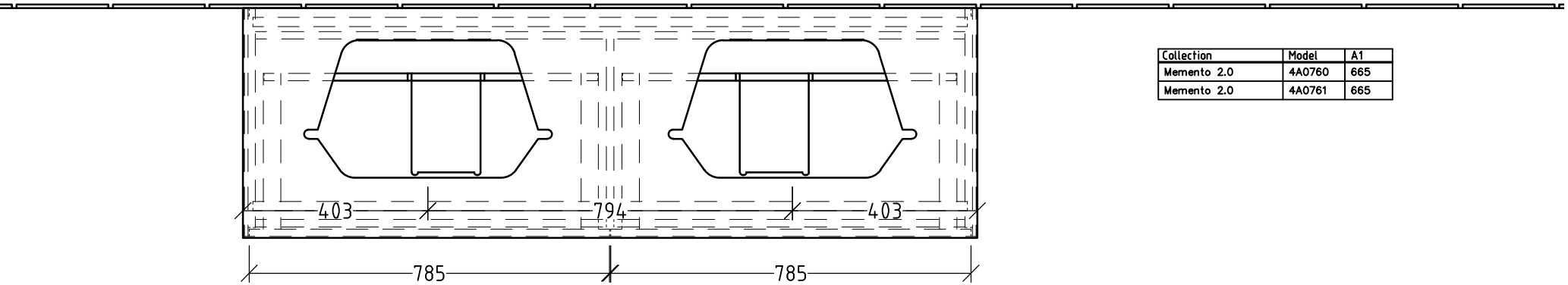

Collection	Model	A1
Memento 2.0	4A0760	665
Memento 2.0	4A0761	665

FINION
G43Z00XX

V02 / 20.05.2025

Villeroy & Boch
1748