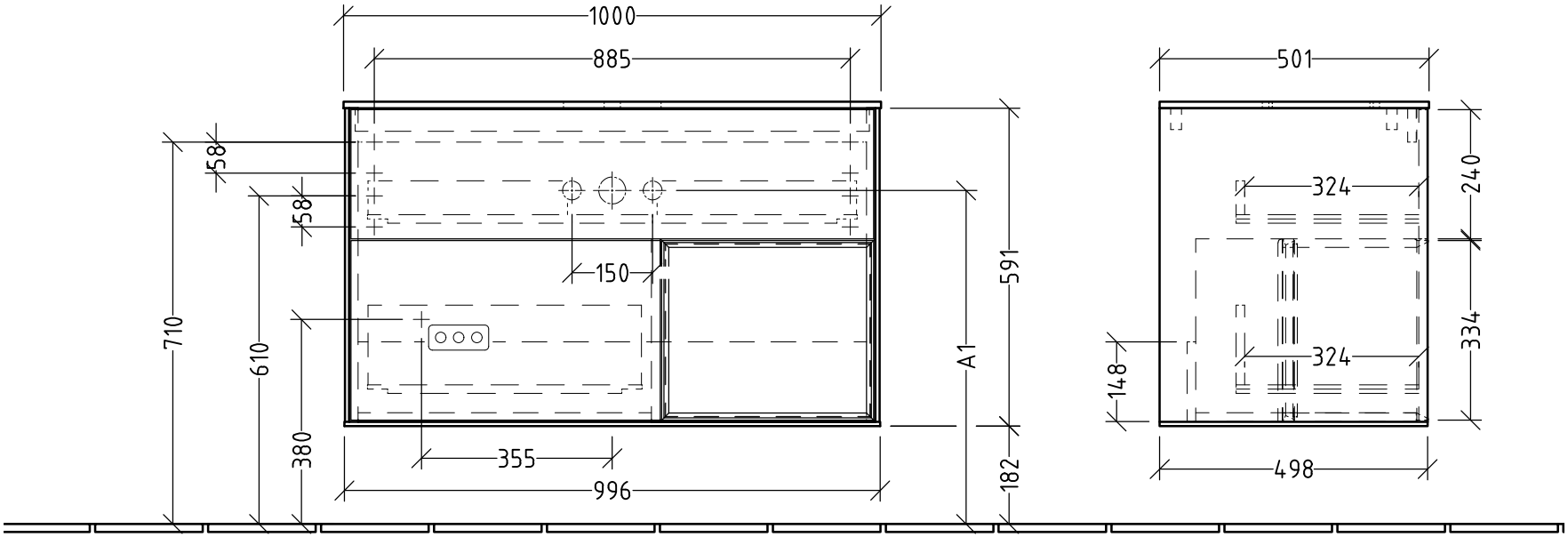


220 - 240 V

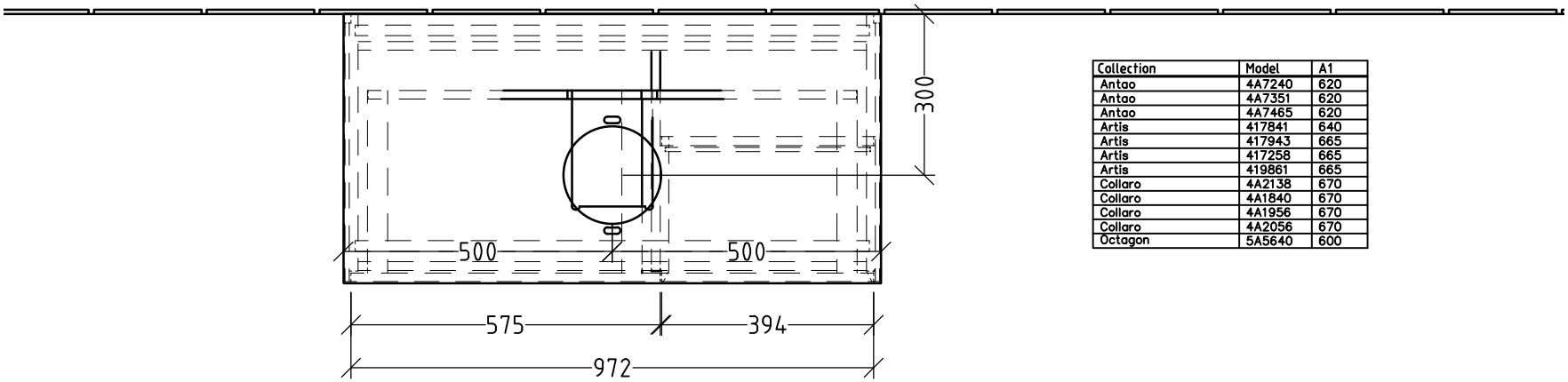


| Collection | Model | A1 |
|---|---|---|
| Antao | 4A7240 | 620 |
| Antao | 4A7351 | 620 |
| Antao | 4A7465 | 620 |
| Artis | 417841 | 640 |
| Artis | 417943 | 665 |
| Artis | 417258 | 665 |
| Artis | 419861 | 665 |
| Collaro | 4A2138 | 670 |
| Collaro | 4A1840 | 670 |
| Collaro | 4A1956 | 670 |
| Collaro | 4A2056 | 670 |
| Octagon | 5A5640 | 600 |

FINION

GA2ZYYXX

V02 / 20.05.2025

Villeroy & Boch

1748