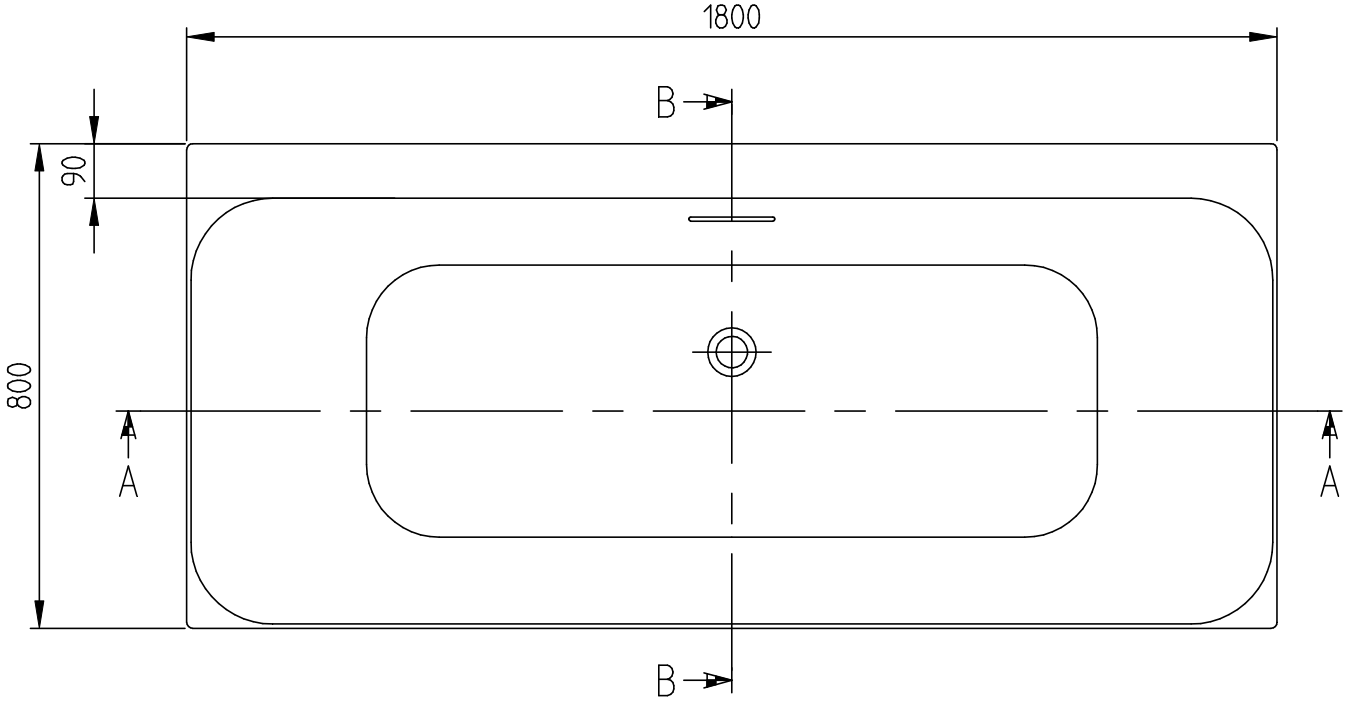

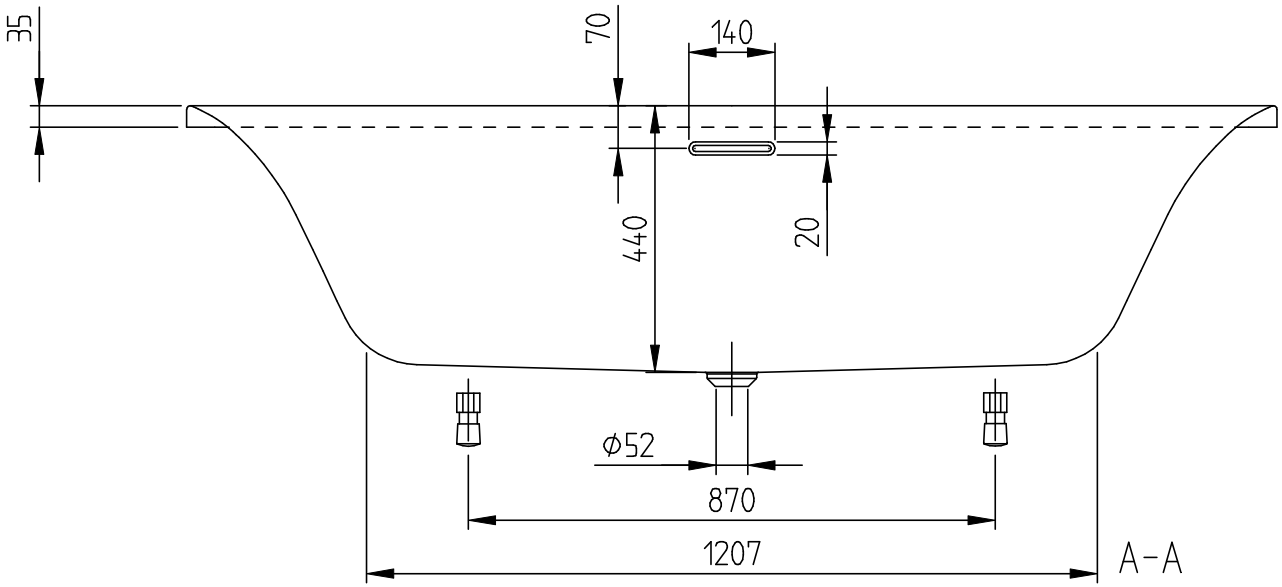

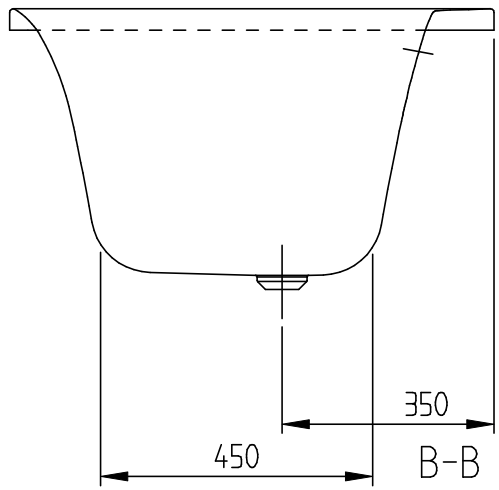

LOOP & FRIENDS 1800x800 UBA180LSF2V	Villeroy & Boch 1748
V02/ 13-12-2021	