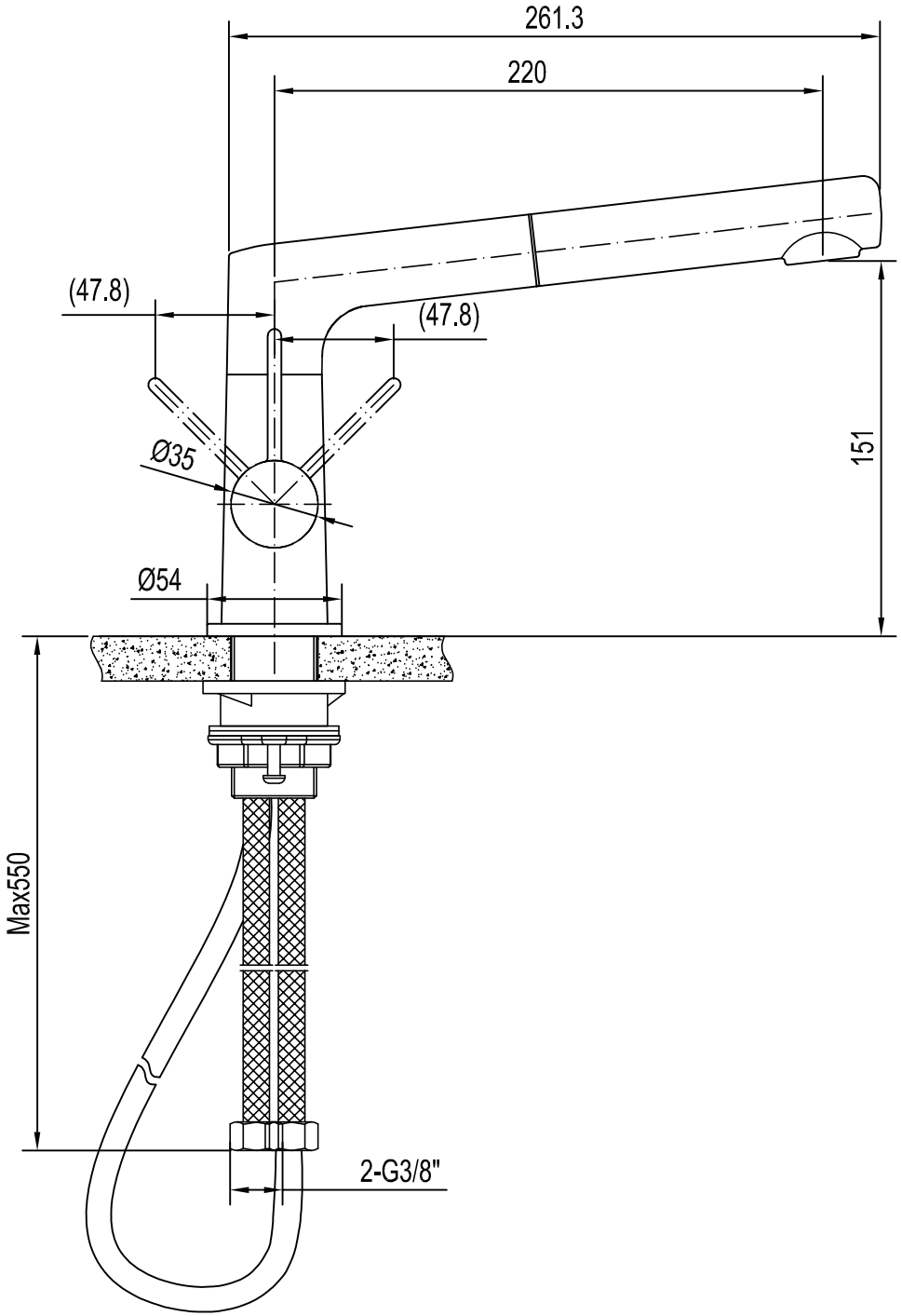

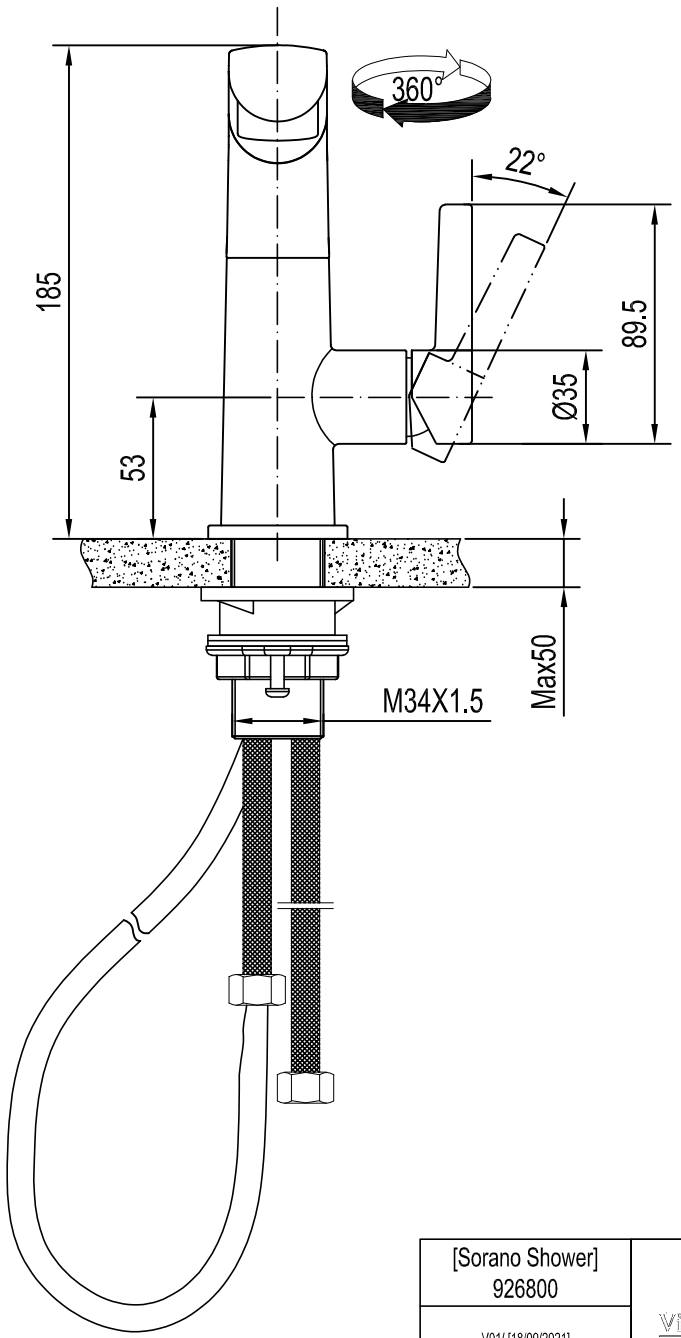

[Sorano Shower] 926800	Villeroy & Boch 1748
V01/ [18/09/2021]	