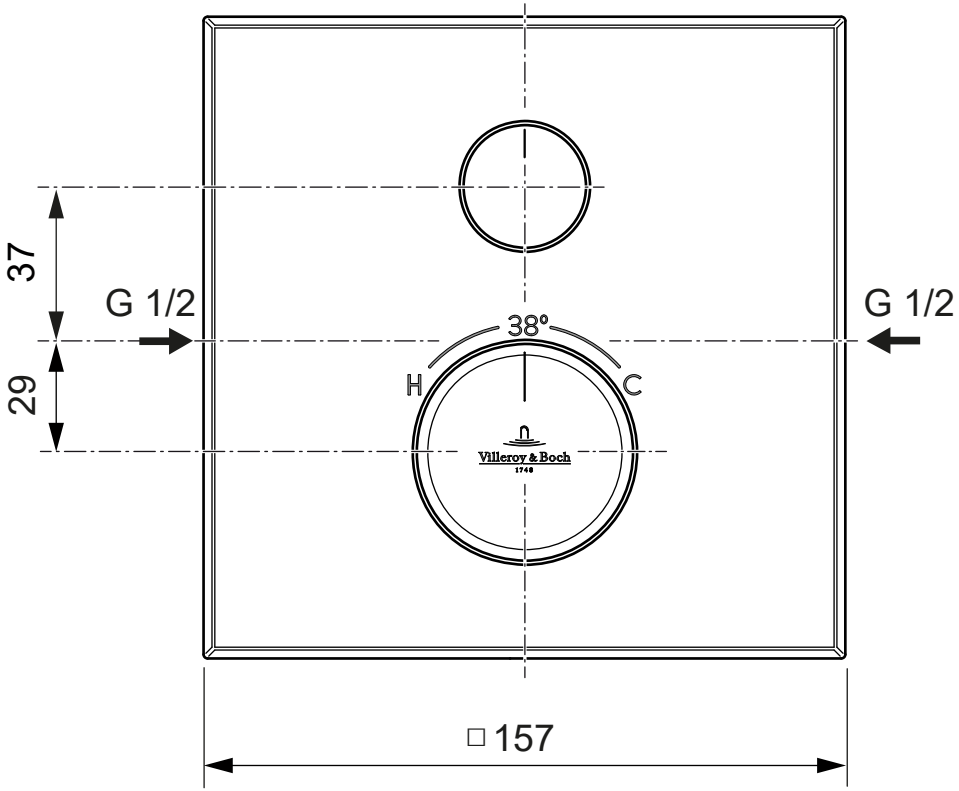

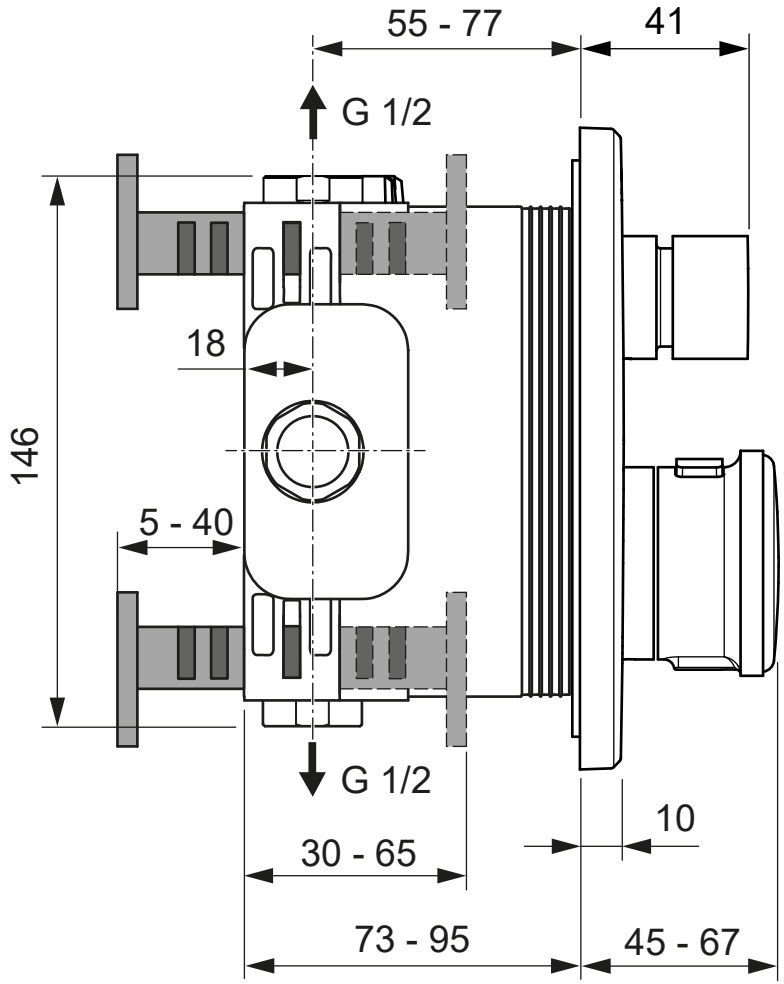

VEA TVS117001002	Villeroy & Boch 1748
V02 / 02.09.2025	