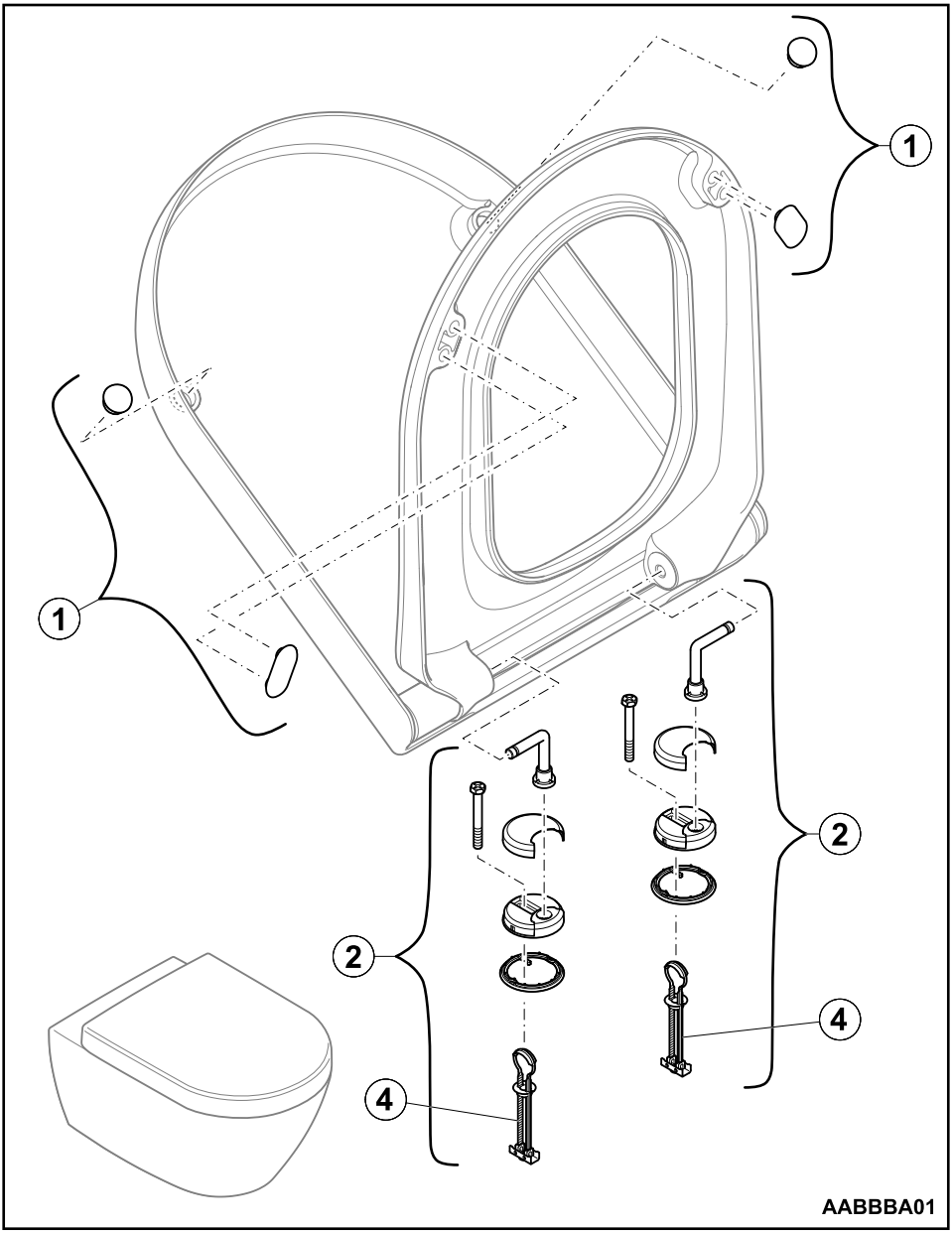
1
1
2
2
4
4
AABBBA01